Dentaltools.fr

XIV Configuration list

No.	Name	Specification	Quantity	Remark
1	Lamp head	LED-90W	1	
2	Lamp arm	—	1	
3	Fixed plate	—	1	
4	Power box	—	1	
5	Expansion screws	M10x12x100	2	
6	Installation tools	4#socket head wrench	1	
7	Fuse	F2AL250V-φ5x20mm	1	
8	User manual	A5	1	
9	Certification	—	1	

2025-01-23 version 1

KD-2012B-5 Operation Light

USER MANUAL

NANJING YANAN SPECIAL LIGHTING FACTORY

www.dentaltools.fr

XIII Warranty card and maintenance card

Warranty card

Company name:			
Address		Phone No.	
Product name		Model	
Serial Number		Manufacture date	
Sale date			
Fault description:			
Remark: The warranty of our products is 18 months since release date.Please keep the certificate and instruction properly, and send it back with the product when repairing.			

(Please truthfully fill in this form, cut it according to the dotted line and send it back to our company, thank you for your cooperation)

Maintenance card

Company name:			
Address		Phone No.	
Product name		Model	
Serial Number		Manufacture date	
Sale date			
Fault description:			
Remark:You can enjoy 30% discount for the maintenance services even if you use this card over the quality assurance period.			

XI After-sales service

◆The product warranty period is 18 months
◆Under the circumstances of normal use during the warranty period, any failure caused by the quality problems of the product itself can be repaired free of charge with the warranty and purchase invoice.
◆The bulbs are consumable accessories.
◆After modifying or installing other functions without the company's permission, the product failure, not within the scope of warranty.
◆If the marks on the product such as model, serial number, date of manufacture has been altered, deleted, moved, or unidentifiable, will not provide free warranty service.
◆Failure caused by human factors such as falling, squeezing, soaking and damp is not covered by the warranty.
◆The production date is shown on label, service life is 5 years, we provide lifetime maintenance.
◆After-sales service number: +86-25-52777091
Mobile phone (Wechat) :+86-13675197193

XII Transportation and storage condition

Environment temperature: -40℃～55℃
Relative humidity: 30%~80%
Atmospheric pressure: 500hpa~1060hpa

I Brief introduction

KD-2012B-5 operation Lamp uses the international brand LED as the light source, reflecting and focusing light, and the brightness is adjustable in four gears. Lamp holder and arm can rotate freely, multi-angle lighting, when not in use, it could be collected close to wall. This product is composed of lamp holder, power box, spring arm and wall bracket.
The lamp head diameter of this product is 360mm, larger than ordinary examination lamp, smaller than shadowless lamp. Makes up for small lighting spot ,low illumination, short lighting depth of examination lamp. It is suitable for medical cosmetology, pet animal medical treatment, outpatient lighting in various departments and surgical lighting in family wards, ect.

II Performance summary

1. In the design of the product, low voltage output cold light lighting design is adopted, wide voltage power supply system is used. Low pressure energy saving, stable performance, safety, reliable and long lifetime.
2. Lamp head and arm of this product can rotate freely, with multi-angle lighting, easy to install and operate.
3. The design and production of this operation lamp strictly executes the first part of the safety requirements of medical electrical equipment GB9706.1-2020: general requirements which is guaranteed in safety.

III Main technical parameters

1. Rated voltage: AC100~240V 50/60Hz
2. Input power: ≤30VA
3. Fuse: F2AL250V*1
4. Product specification: LED-90W
5. Color temperature: 4800±300K
6. Lamp head diameter: 360mm
7. Working distance: 700mm

IV Security tips and symbol instructions

1.During the installation and use of this operation lamp, basic safety precautions and necessary protective measures should be observed at all time.
2. Please read the instructions carefully, and operate according to the specifications and requirements.
3.The installation should be carried out on the wall that meets the installation requirements.
4.The installation and commissioning of the operation lamp must be operated by professionals.
5.Before cleaning the operation lamp, turn off power switch and unplug power, Do not use liquid or spray cleaners.
6.When the operation lamp is working, power line should be firmly connected and avoid pedestrian channel; Do not press anything on power cord, so as to avoid human factors affecting lamp working; Do not use this lamp near water.
7. When replacing the bulb, turn off the power switch first, unplug the power cable, the replaced old bulb should be put into the waste bucket, do not throw randomly.
8.The maintenance of the operation lamp should be operated by professionals, and it is recommended that the operator wear an electrostatic ring.
9.Brightness of the operation lamp is very high, so be careful when use it for eyes lighting; Do not observe with eyes in front , in order to prevent eye damage！
10. Graphic symbol Illustration

Protect the earth

Switch

Brightness control

V Working environment

Environment temperature: -5℃ ~40℃
Relative humidity: 35%~75%

9.Bulbs are consumables and have a basic life span. The normal life of LED bulb is about 10000 hours. Pay attention to the use time of the bulb and prepare for it in advance.
10.The use period of the operation lamp is 5 years, after the expiration, if scrapped, its metal, electronic devices, plastics, glass and other materials should be uniformly and strictly treated in accordance with local environmental regulations to prevent its spread or reuse, and the risk of environmental pollution will be minimized.

IX Failure judgment and eliminating methods[This requires professional operation]

Failure phenomenon	Reason	Solution
Turn power switch, the indicator light is not on.	1.AC Power supply circuit is no electricity	Switch to a live supply line.
	2.Power cord is not properly connected	Reconnect power cord.
	3.Fuse is blown	Open the fuse box⑫,replace fuse with the same specification.
Turn power switch, indicator light is on, lamp is not on.	1.The switch didn't turn on.	Press the switch③ to turn on the light.
	2. The power butt plug is not connected properly.	Reconnect the plug between the lamp holder and the power box.
	3.System line fault	Contact our service department.

X Bulb replacement

The bulb of the operation lamp is LED light source, normal life is up to 10000 hours, no need to replace normally. In case of any failure, please inform the manufacturer in time for proper handling.

4)By holding the handle②, the lamp arm can be adjusted around the shaft sleeve⑨ or the connector of the balance arm ⑧ and the spring arm⑦ as the fulcrum to change the lighting Angle and position.
5)When not in use, take the joint between the spring arm⑦ and the balance arm⑧ as the rotating fulcrum, and gather the lamp against the wall.

VIII Attentions

1.The surface of the operation lamp can be cleaned with a soft cloth or sponge; Do not use a hard brush, wire brush, and do not use detergent, paint, banana water, acid, etc., on any surface.
2.When installing the operation lamp, please assemble and reinforce it according to the technical requirements of the manual.
3.The standby fuse should be placed close to the operation lamp workplace, and its specifications and models should meet the basic parameter requirements, so that it can be replaced in time.
4.The surface of the operation lamp should be cleaned and disinfected after the operation [unplug the power plug before cleaning and prevent liquid from penetrating into the lamp], and the detergent must use neutral household detergent and anti-static agent; Do not use phenolic, iodide or glutaraldehyde based disinfectants.
5.The lens surface of the operation lamp should often be cleaned with medical gauze or soft brush to maintain the illumination.
6.It is strictly forbidden to hang other items other than the equipment in the body of the operation lamp; Do not pull and turn the lamp head and lamp arm heavily when using!
7.Use 75% alcohol cotton to disinfect and remove dust from surface of the lamp every two months. [Note! Before cleaning, unplug the power cord and prevent liquid from penetrating into the lamp]
8.The nut, level, damping, switch, brightness, ringing and other conditions of the surgical lamp should be comprehensively checked every quarter, and the abnormal conditions should be repaired and adjusted in time.

Atmospheric pressure: 700hPa～1060hPa

VI Product interface （Picture 1）

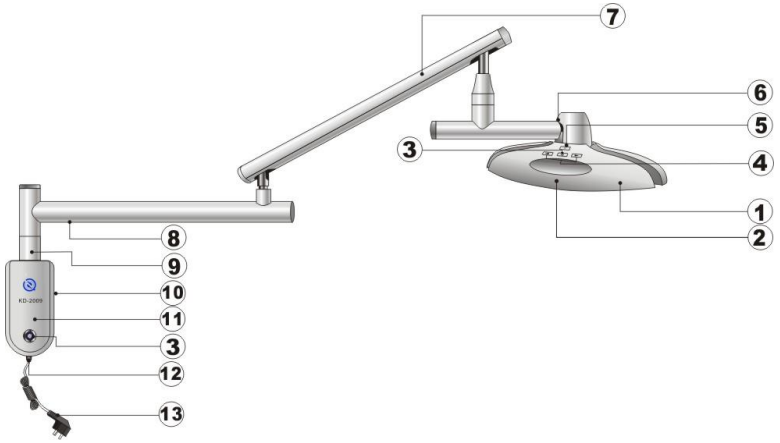

①Lamp head ②Handle ③Lamp switch ④Brightness adjustment ⑤Gear display ⑥Steering joint ⑦Spring arm ⑧Balance arm ⑨shaft sleeve ⑩Fixed plate ⑪Power box ⑫Fuse box ⑬Power cord

Picture 1

VII Usage

1. Check before use
1) Open the package, check whether the product is damaged or missing parts.
2) According to the Configuration List, check whether the product model, name, quantity and accessories are consistent with the Configuration List; If any exception is found, contact the manufacturer or distributor in time for proper handling.
3) Read the instructions against the product and remember the precautions, familiar with the installation steps.
2.Product installation and use
1) Wall quality is an important factor in the installation and use of safety, general concrete walls, brick walls, steel walls, 24 brick walls can meet safety requirements. The installation height of the wall mounted

operation lamp is generally 1.6m.[Note: gypsum board, plastic partition, thin wooden walls can not meet safety requirements, confirm before installation.]

2) Draw two holes on the selected position of the wall according to fixed plate⑩. [Note: the end of the arc is down, and the center of the two holes should be on the same horizontal line!] See Picture 2-A for details. After the drawing is finished, drill two pre-buried holes with a depth of > 120mm with a ∮12mm drill bit. Remove the residual in the holes and install expansion screws. Hammer the end of the holes to make the expansion tube in the same plane as the wall. Tighten it with a wrench and remove the screw for use.

3) According to Picture 2-B, remove the 4 screws on the shaft sleeve⑨, connect it with the fixed plate⑩ and install 4 screws to tighten them, and then the fixed plate⑩, balance arm⑧ and spring arm⑦ are integrated.

4) Install the fixed plate⑩ on the wall according to Picture 2-C, install the two screws which wait to be used and tighten them with a wrench, ensuring that the balance arm⑧ is at the same level when placed on the left and right.

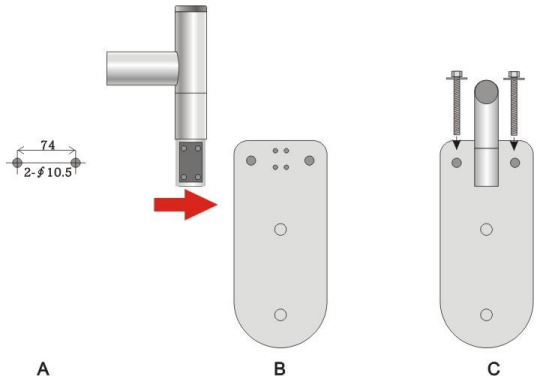

Picture 2

5) According to Picture 3-D, E and F, connect the plug-in securely. Insert the spare cable into the power box through the holes, align the fixing holes at the back of the power box with the two fixing buttons on the fixed base plate, and push the power box down to secure it to the fixed base plate.

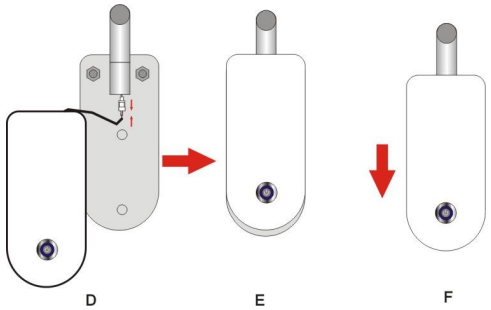

Picture 3

6) Remove the fixing screws on the lamp connector, connect the power connector firmly, and then connect the lamp connector with the spring arm, install the fixing screws and tighten. The installation of the operation lamp is complete, as shown in Picture 4-1 and 2.

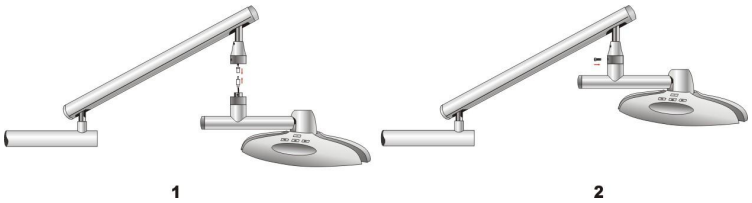

Picture 4

3.Usage

1)Connect the plug of the power cord⑬ to the network power supply, press the switch③ on the power box⑪, the indicator light up; Then press the switch③ on the lamp head, the lamp will turn on, and the operation lamp will start to work.

2)The operation lamp has four gear brightness adjustment, click the brightness adjustment④ to increase or decrease the brightness of the operation lamp.

3)Grasp the handle② to adjust the height of the lamp head up and down and can rotate the lamp head around the steering joint⑥ as the fulcrum.